Zip InLine

Electronically controlled instantaneous water heaters.

Model number:
DBX, DEX

CONTENTS

SAFETY INSTRUCTIONS . . . 3
GENERAL PRODUCT DESCRIPTION . . . 5
APPROVALS . . . 5
DIMENSIONS . . . 5
SPARE PARTS . . . 6
TECHNICAL DATA . . . 7
INSTALLATION . . . 8
- Requirements . . . 8
- Installing the wall bracket . . . 9
- Electrical connection . . . 11
- Electrical connection from below . . . 12
- Electrical connection from above . . . 13

COMMISSIONING . . . 14
- Model DBX . . . 14
- Temperature Adjustment . . . 14
- Model DEX / DEX12 . . . 14
- Selection of power rating . . . 14
- Lock level . . . 16

SERVICE MENU . . . 16
MAINTENANCE & CLEANING . . . 18
- Purging after maintenance work . . . 18

OPERATION . . . 20
- Model DEX / DEX12 only . . . 20
- Temperature setting . . . 20
- Programme buttons . . . 20
- How to save energy . . . 21
- Power limit . . . 21

FAULT FINDING . . . 22
END OF LIFE DISPOSAL . . . 23
WARRANTY . . . 23

- Please read these instructions carefully before commencing installation of the instantaneous water heater.
- Please leave these instructions with the end user after installation.
- To ensure you have a copy of the latest instructions visit www.zipwater.co.uk.

IMPORTANT:

PLEASE READ THESE INSTRUCTIONS CAREFULLY. NOTE THE SAFE OPERATIONAL REQUIREMENTS, WARNINGS AND CAUTIONS. USE THIS PRODUCT CORRECTLY AND WITH CARE FOR THE PURPOSE FOR WHICH IT IS INTENDED. FAILURE TO DO SO MAY CAUSE DAMAGE AND/OR PERSONAL INJURY, AND WILL INVALIDATE THE WARRANTY. RETAIN THESE INSTRUCTIONS FOR FUTURE USE.

⚠ WARNINGS

- Installation, commissioning and maintenance of this appliance must only be carried out by a competent installer who will then be responsible for adhering to all relevant standards and regulations.
- If inlet temperature is up to 70 °C (eg. fed from a solar supply) mixing with cold water will be required to ensure a safe temperature at the outlet.
- Do not remove the front cover under any circumstances before switching off the mains electrical supply to the unit.
- Never make technical modifications, either to the appliance itself or the electrical leads and water pipes.
- ⏚ The appliance must be earthed at all times.
- Pay attention to the fact that water temperatures in excess of approx. 43 °C are perceived as hot, especially by children, and may cause a feeling of burning. Please note that the fittings and taps may be very hot when the appliance has been in use for some time.
- The values stated on the rating plate must be observed.
- In case of malfunction, disconnect the mains power supply immediately. In case of leaks, cut off the mains water supply instantly. Repairs must only be carried out by the customer service department or an authorised professional.
- This appliance can be used by children aged 3 years and above and persons with reduced physical, sensory or mental capabilities or lack of experience and knowledge if they have been given supervision or instruction concerning use of the appliance in a safe way and understand the hazards involved. Children shall not play with the appliance. Cleaning and user maintenance shall not be performed by children without supervision.
- If the appliance is factory equipped with a power supply cable, it must be replaced with an original spare cable from the manufacturer in case of damage by an authorised technician in order to avoid any hazards.
- In accordance with EN 60335, the appliance must be permanently connected to the supply through an isolating switch with a contact separation of at least 3 mm in all poles and be protected by a suitably rated RCD.
- The wall bracket must be secured with the supplied screws and dowels. The appliance must be secured to the wall bracket. The appliance may only be operated if it has been properly mounted on the wall bracket.
- The required water resistance may not fall below the value stated on the rating plate at any time.

To observe additionally for pressureless installation:

- The water outlet behind the devices must not be blocked, and the water flow must not be restricted.
- The water outlet facilities, such as shower heads must be decalcified regularly. Deposits must be removed at regular intervals.
- Only the fittings recommended by the manufacturer may be used.
- If the appliance is exclusively connected to a single shower, only the shower heads recommended by the manufacturer may be used. No other fittings or appliances which decrease the water flow to the shower may be installed.

ⓘ CAUTIONS

- Optimum operation is ensured at a water flow pressure of 0.2 to 0.4 MPa (2-4 bar). The appliance must not be subjected to pressure exceeding 1.0 MPa (10 bar).
- The appliance must only be used when correctly installed and in perfect working order.
- The appliance must be installed in a frost-free room and must never be exposed to frost.
- The DEX and DBX range is not intended for use with thermostatic mixing valves or taps. If thermostatic mixing valves or taps are to be used, their compatibility with the instantaneous water heater must be verified under site operating conditions.
- The appliance must be completely filled with water before being switched on.
- Before commissioning for the first time and each time the appliance or the piping system is emptied (e.g. due to work on the plumbing system or maintenance), the appliance must be purged by opening and closing the hot water tap until all air has been eliminated from the water heater and no more air emerges, before re-connecting to the electrical supply.
- The appliance must only be used for heating wholesome (or cat 1) water. The specific water resistance must not fall below the required value indicated on the rating plate. The appliance must not be used for any other purpose.
- Incoming water temperature must not exceed that stated in Technical data.
- The Zip InLine is intended for connection to mains supply only. In any other case please contact Zip on 0345 6 005 005 for advice.
- **Zip Water UK cannot be held liable for any damages caused by failure to observe these instructions.**

GENERAL PRODUCT DESCRIPTION

The instantaneous water heater DEX / DBX is a electronically controlled, pressure-resistant water heater for a decentralised water supply to one or more tap connections.

Its electronic control regulates the power consumption depending on the selected outlet temperature, the respective inlet temperature and the flow rate, thus reaching the set temperature exactly to the degree and keeping it constant in case of pressure fluctuations.

For DEX the required outlet temperature can be entered on a keypad within the range 20 °C to 60 °C (DEX12 range is 20 °C to 55 °C) and can be read off the digital display.

For type DBX the factory set outlet temperature is 50°C and can be adjusted inside the appliance within the range 30°C to 60°C.

For DEX (*excluding DEX12) a maximum inlet temperature of 70°C is suitable for use with preheated water from solar heating systems.

*For DEX12 the maximum inlet temperature is 25°C.

APPROVALS

Zip InLine DEX and DBX are VDE approved to the LVD and EMC directives and are CE marked.

Zip InLine DEX and DBX have been examined, tested and found when correctly fitted to comply with the requirements of the United Kingdom Water Regulations / Byelaws (Scotland).

The products are listed under the WRAS (Water Regulations Advisory Scheme) Water Fittings and Materials Directory.

DIMENSIONS

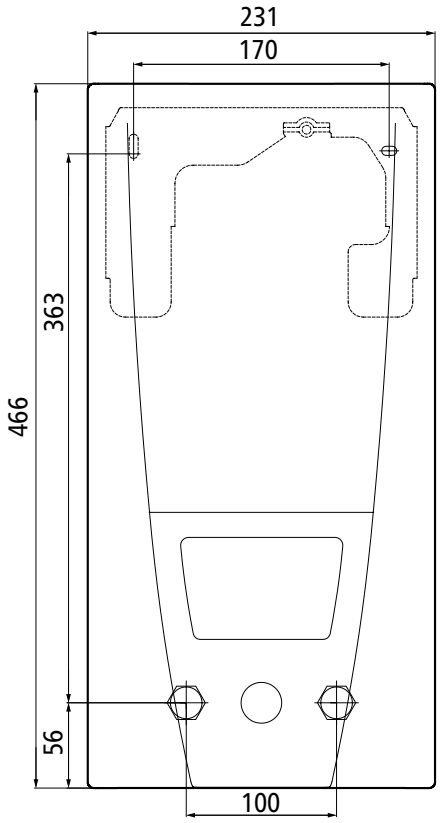

Dimensions in mm

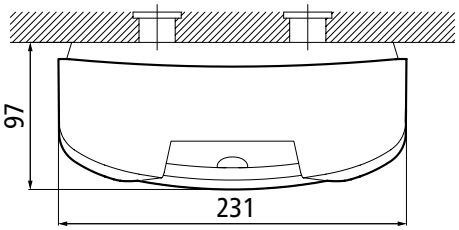

SPARE PARTS

When ordering spare parts, please always specify the appliance model and serial number.

Spares are available, however they may be on a made to order basis.

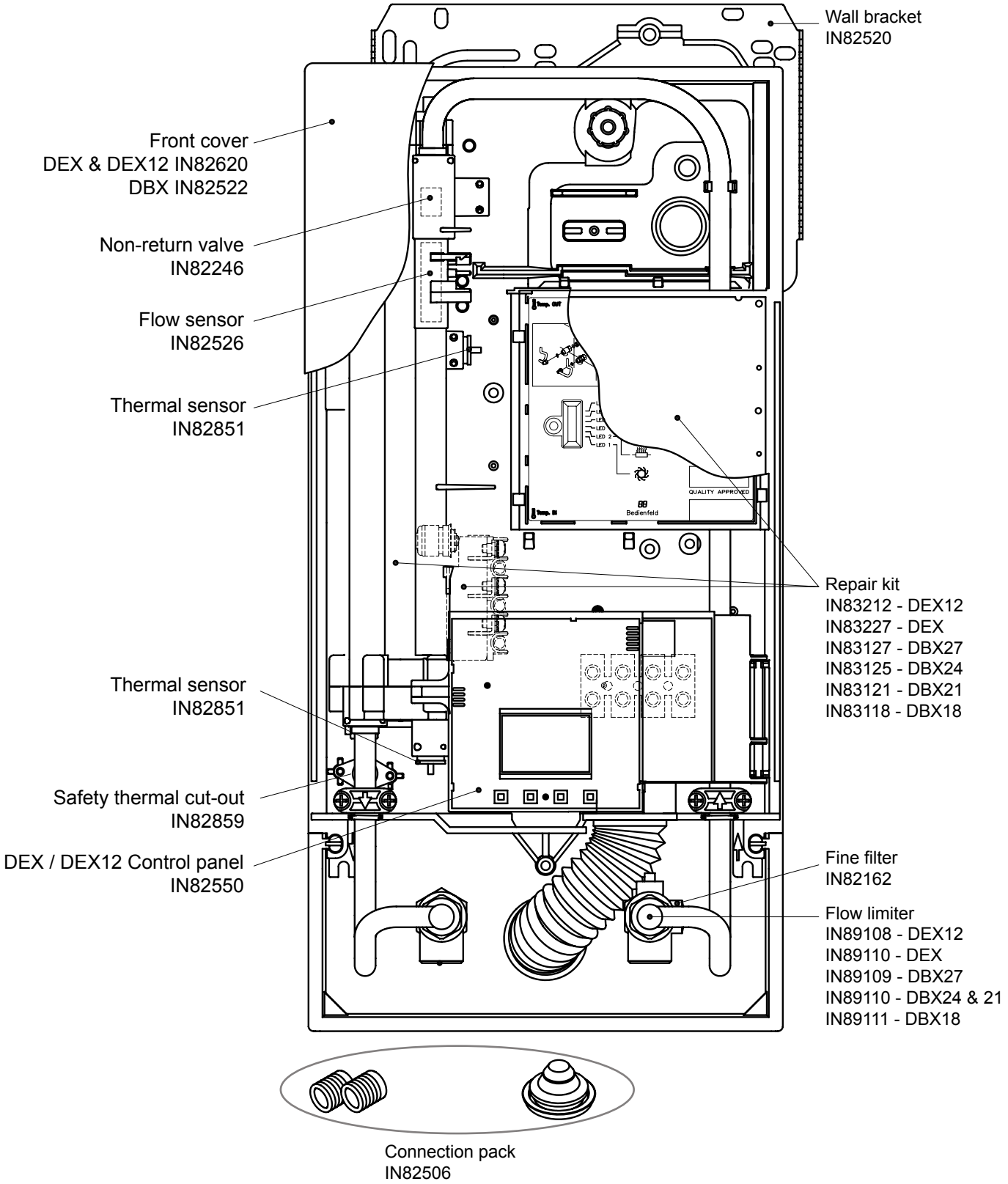

TECHNICAL DATA

MODEL		Zip InLine DEX12	DEX	DBX18	DBX21	DBX24	DBX27
Installation		pressure-resistant / pressureless					
Declared load profile		XS	S				
Energy efficiency class *)		A					
Energy efficiency (ηwh) *)	%	40	38				
Annual electricity consumption *)	kWh	467	484	486	484	483	484
Thermostat / Temperature setting	°C	55	60				
Sound power level	dB(A)	15					
Power rating	kW	8.8 / 11.5 1)	18/21/24/27 1)	18	21	24	27
Nominal Supply voltage	V AC	220 – 240	3/PE 380 – 400				3/PE 400
Rated current	A	38 / 50	26/30/35/39 2)	26	30	35	39
Min. required cable size	mm²	10	4 / 4 / 6 / 6 2)	4	4	6	6
Hot water max. at Δt = 33 K	l/min						
Rated volume		0,3 l					
Rated pressure	MPa	1.0					
Heating system		Bare wire heating system IES®					
@ 15 °C: Required spec. water resistance Spec. electrical conductivity	 Ωcm mS/m	 ≥ 1300 ≤ 77	 ≥ 1100 ≤ 90.9	≥ 1300 ≤ 77			
Inlet temperature	°C	≤ 25	≤ 70	≤ 30			
Flow rate to switch on – max. flow rate	l/min	2,5 – 5,0 3)	2,5 – 8,0 3)	2,5 – 7,0 3)	2,5 – 8,0 3)		2,5 – 9,0 3)
Temperature rise at max. flow	°C	25 / 33	32/37/42/48 3)	36	37	42	43
Temperature choice	°C	20 – 55	20 – 60	30 – 60			
Water connection		G ½"					
Weight (when filled w. water)	kg	3.7					
VDE class of protection		I					
Water protection class		IP25					
Type of protection / safety							

*) The declaration complies with the EU regulation No 812/2013
1) Power rating is selected at time of installation
2) Depending on the selected power rating
3) Flow rate limited to achieve optimum temperature rise
The cable size may not exceed 10 mm²
All data quoted at nominal supply voltage. Standard European voltage tolerances of -6 % to +10 % may be applied.
A minimum water pressure of 0.2 MPa (2 bar) is recommended for optimum performance.
Maximum flow rate will be achieved at a water pressure of 0.6 MPa (6 bar).
The appliance must not be subject to more than 1.0 MPa (10 bar).

Instantaneous performance calculations

$$\text{Temperature rise °C} = \frac{\text{(Nominal power rating (kW) x 14.3)}}{\text{Flow per minute (litres)}}$$

Requirements

The following regulations must be observed:

- **EN 806**
- **The installation must comply with current IEE regulations and relevant Local Authority requirements**
- **The rating plate and technical specifications**
- **Only functional and appropriate tools must be used during the installation**

Installation site

- Appliance must only be installed in frost-free rooms. Never expose appliance to frost.
- The appliances are designed for wall mounted installation and has to be installed with water connectors downward.
- DEX & DBX models comply with protection type IP 25.
- In order to avoid thermal losses, the distance between the instantaneous water heater and the tapping point should be as small as possible (< 2m).
- For maintenance work, a shut-off valve should be installed in the supply line. The appliance must be accessible for maintenance work.
- Hot and cold water connecting pipes should be WRAS approved and of copper or steel construction. Plastic pipes may only be used if they conform to EN 16893, Series 2. The hot water pipes must be thermally insulated.
- The specific resistance of the water must be at least 1300 Ωcm at 15 °C for DEX12 / DBX and 1100 Ωcm for DEX. The specific resistance can be asked for with your water supply company.
- When considering the location of the heater, consideration should be given to the safe and visible disposal of any water resulting from leaks and seepage. This is particularly relevant when the heater is located in a cupboard or any concealed location. For guidance please call Zip on 0345 6 005 005.

Installing the wall bracket

Thoroughly flush the water supply pipes before installation to remove any water borne debris.

- Using a 12 mm hexagon socket screw key, screw the screw-in nipples into the wall connections. The seals must be fully screwed into the thread. After tightening, the double nipples must protrude by at least 12 mm.
- Hold the mounting template (provided) on the wall and align it so that the holes in the template fit over the connections. Mark the drill holes according to the template and drill them using a 6 mm drill. Insert the dowels (provided).
- Screw in the wall bracket. Offset tiling or uneven surfaces can be compensated by up to 30 mm with the aid of the spacers supplied. The spacers are fitted between the wall and the wall bracket.

Fig. 1

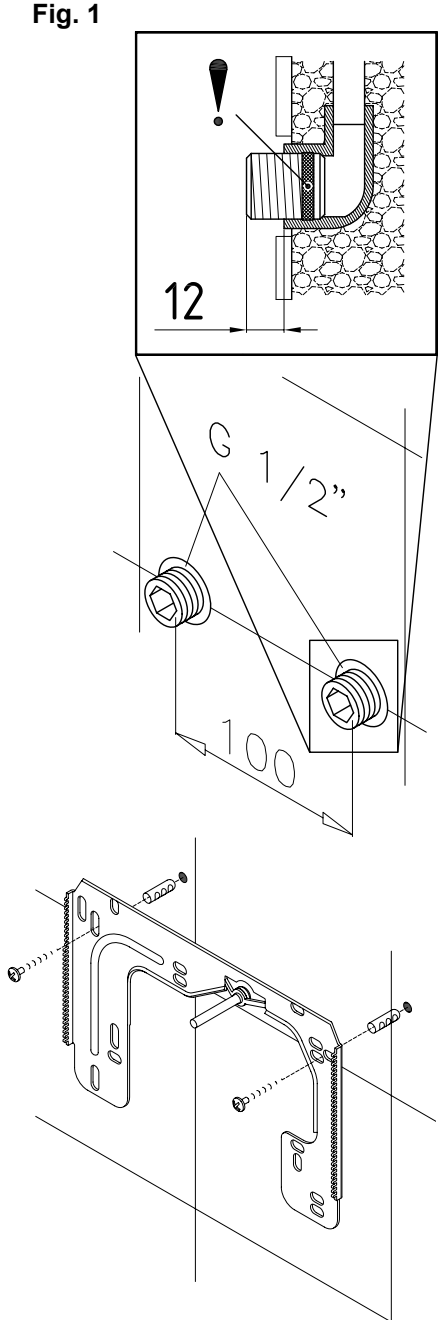

Installing connection pieces

Note: Fasten the fittings with caution, to avoid damage to the valves or the piping system.

- As shown in the illustration, screw the cold water connection (A) piece with the union nut and the ½ inch seal onto the cold water connection.
- Screw the hot water connection piece (B) with the union nut and the ½ inch seal onto the hot water connection.

Fig. 2

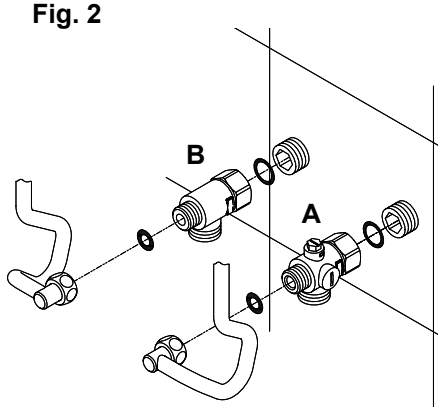

Installing the appliance

- Remove the appliance cover by first removing the fascia panel then unscrewing the fixing screw.
- If the power supply cable is to be connected in the upper part of the appliance follow instructions “Electrical connection from above”.
- Place the appliance on the heater bracket so that the threaded rod of the wall bracket fits in the corresponding hole of the appliance. If necessary, slight corrections are possible by carefully bending the threaded rod of the wall bracket. However, it must be possible to screw on the water connection pipes of the appliance without applying force.
- Screw the two ⅜ inch union nuts of the appliance‘s water connection pipes, each with the ⅜ inch seal, onto the fittings.
- Screw the plastic knurled nut onto the threaded rod of the wall bracket.
- Open the water supply line to the unit and slowly open (position “open“) the shut-off valve (a) in the cold water connection piece. Check all connections for leaks.
- Ensure that all air is removed from the water heater by opening and closing the hot water tap until no more air emerges.

Fig. 3

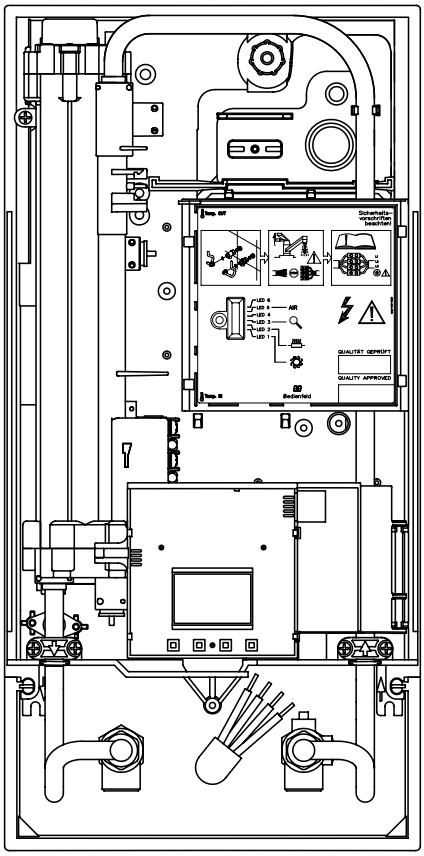

Fig. 4

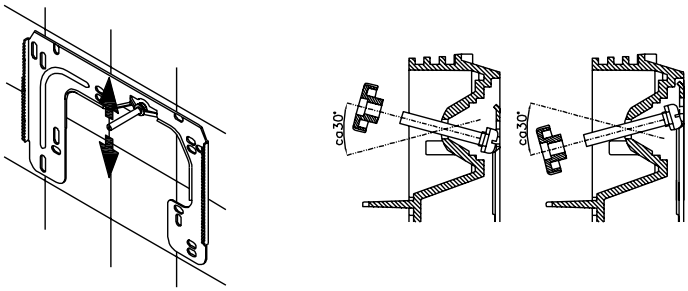

Fig. 5

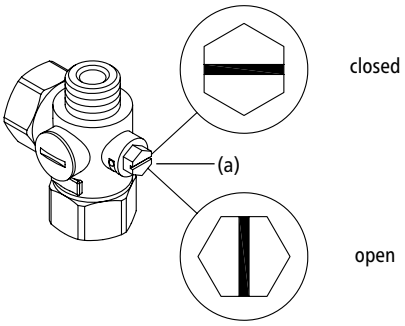

Note: Fasten the fittings with caution, to avoid damage to the valves or the piping system.

For surface mount connection, the two ½ inch screw-in nipples and the ½ inch seals must be screwed into the ½ inch union nuts of the hot-water and cold-water connectors. The two ½ inch caps of the side outlets of the hot-water and cold-water connectors must be removed and screwed onto the open end of the screw-in nipples. The hot-water and cold-water connectors must then be screwed into the $^3/_8$ inch union nut of the appliance and delivery pipe, together with the $^3/_8$ inch seals.

For surface mount connection, it is advisable to mount the appliance at a distance as illustrated in Fig. 6, using the spacer sleeves supplied. It should therefore be noted that the two fixing holes near the lower pipe connections are also used.

The flared end of the pipes must be screwed into the ½ inch side outlets of the hot-water and cold-water connectors with ½ inch union nuts and ½ inch seals. The holes required for the pipes must then be broken out of the housing with the aid of a blunt implement.

In case of direct connection please note: Ensure the line strainer is inserted into the cold water connection!

Fig. 6

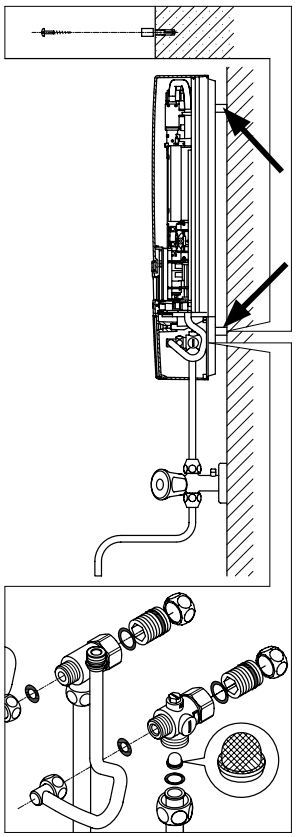

Electrical connection

Only undertaken by a competent person familiar with electric instantaneous water heaters !

Please observe:

- **The electrical installation must comply with current IEE regulations and relevant Local Authority requirements**
- **The rating plate and technical specifications**
- **The appliance must be earthed!**

Fig. 7

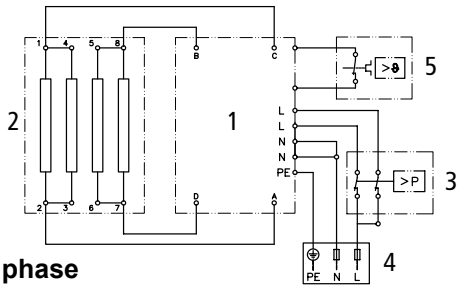

Single phase

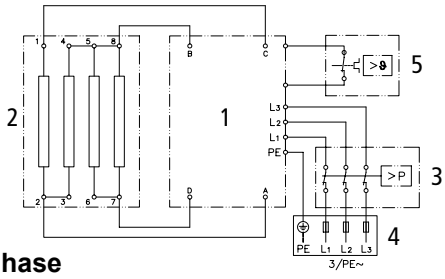

3-phase

Structural prerequisites

- The appliance must be installed via a permanent connection.
- Heater must be earthed!
- A maximum cable size must be observed: 10 mm² (16 mm² for DEX12).
- Take care to protect the wiring from damage during installation and ensure that the wiring is not directly accessible after installation.
- The appliance must be permanently connected to the supply through an isolating switch with a contact separation of at least 3 mm in all poles and be protected by a suitably rated RCD.

Wiring diagram

1. Electronic circuitry
2. Heating element
3. Safety pressure cut-out
4. Terminal strip
5. Safety thermal cut-out

Load shedding relay (DEX only)

If further three-phase appliances are connected, a load shedding relay designed for electronic instantaneous water heaters (IN82250) can be connected to phase conductor L_2.

A special operating mode must be selected on the appliance for this purpose.
To change the operating mode, press the four keys (①, ⌄, ⌃ and ②) simultaneously and wait until the desired mode (0, 1 or 2) is shown on the display, then release the keys. Operating mode 1 must be selected first, thus to check the correct operation of the load shedding relay at low appliance output (35 °C setpoint and low water flow rate). Mode 2 must be selected if the load shedding relay flickers.

LCD	Description
0	Operation without load shedding relay, manufacturer‘s setting
1	Operation with normal load shedding relay
2	Operation with sensitive load shedding relay

Electrical connection from below

Note: If necessary, the connecting terminal can be moved to the upper part of the appliance. To do so, please follow the instructions in the next section.

Check that the power supply is switched off prior to electrical connection!

- Remove inner and outer insulation from the connecting cable to the lengths shown in Fig. 9.
- With the smaller opening foremost, slide the water splash protection sleeve over the connecting cable until the sleeve is flush with the wall. This prevents any water leaks from coming into contact with the electrical leads. The protection sleeve must be fitted and free from damage.
- Open the control panel rightwards.
- Fit the connecting cables into the terminal block according to the wiring diagrams on page 11. Ensure all connections are fully tightened and secure.
- Pull the protective sleeve over the connecting cables until the sleeve fits perfectly in the recess of the intermediate panel. Adjust the water splash protection sleeve as illustrated. Re-fit the control panel and lock it on the heating element.
- Re-fit the appliance cover and secure with the fixing screw before re-fitting the fascia panel.

Fig. 8

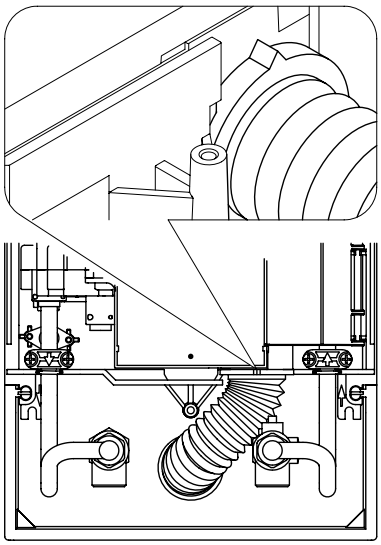

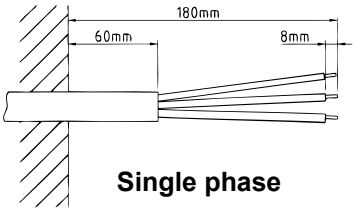

Single phase

Fig. 9

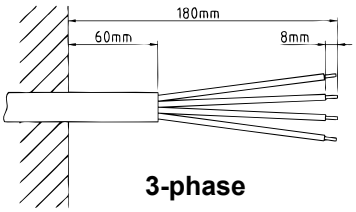

3-phase

Electrical connection from above

Check that the power supply is switched off prior to electrical connection!

- Open the prepared breaking point (S) in the upper part of the appliance by pressing with a blunt implement (e.g. srewdriver).
- Slit the grommet to match the cable size. The opening in the grommet should be slightly smaller than the cross-section of the cable in order to ensure optimum protection against water. Fit the grommet into the opening. The protection grommet must be used!
- Strip the cable roughly 6 cm above the point where it emerges from the wall. Support the appliance while the cable is routed through the grommet.
- Place the appliance on the wall bracket so that the threaded rod of the wall bracket fits in the corresponding hole of the appliance.
- Open the control panel rightwards.
- Unscrew the fastening screw of the connecting terminal. Move the terminal block to the upper position, & screw into place.
- Strip the cables and firmly secure them in the connecting terminals according to the wiring diagram. The appliance must be earthed.
- Re-fit the control panel and lock it on the heating element.
- Re-fit the appliance cover and secure with the fixing screw before re-fitting the fascia panel.

Fig. 10

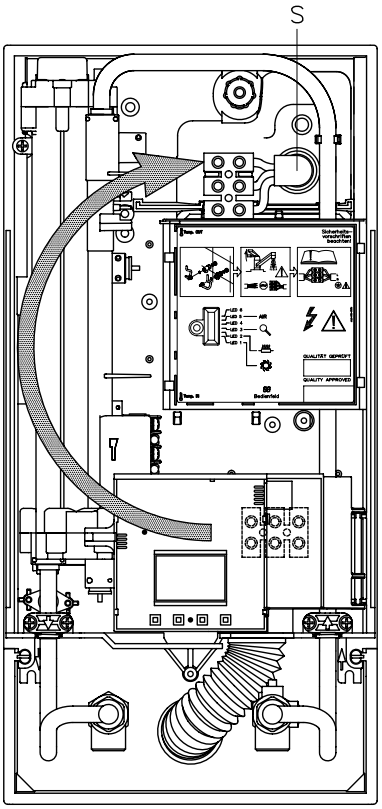

To prevent damage to the appliance, the instantaneous water heater must be purged of air before using it for the first time.

Before connecting the electrical supply, open and close the hot water tap until the water runs smoothly and no more air emerges.

To ensure a maximum flow, remove any existing aerator from the tap. Flush the warm and cold water pipes each at least for one minute.

After every draining (e.g. after work on the plumbing system or following repairs to the appliance), the heater must be re-purged in this way before starting it up again.

If the water heater does not function, the temperature cut-out or the pressure cut-out may have tripped during transport. If necessary, reset the cut-out.

Fig. 11

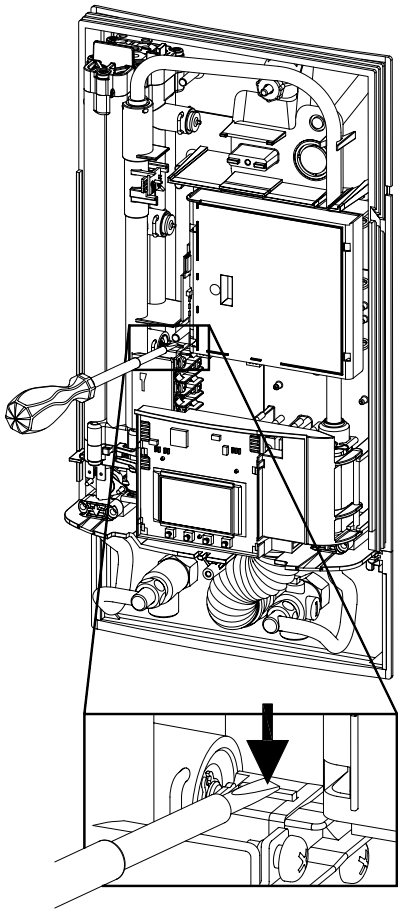

Model DBX

Note: DBX 27 kW for connection only to 3/PE 400V AC supply.

- Switch on the power supply to the appliance.
- Open the hot water tap. Check the function of the appliance. The heating element will be activated after approx. 10 - 30 seconds of continuous water flow.
- Explain operation of the appliance to the end user and leave the operating instructions for their reference.
- Complete the product registration card and return it to Zip or register the product at www.zipwater.co.uk/product-registration.

Temperature Adjustment

- The factory set hot water outlet temperature is 50 °C.
- This factory setting can be modified within the range of approx. 30 °C to 60 °C by turning the potentiometer with a slotted screwdriver as shown in Fig. 12 (width approx. 2 mm).
- The hot water outlet temperature will be decreased by clockwise rotation and increased by counterclockwise rotation.

Note: The hot water temperature may not exceed 55 °C if the appliance is connected to a shower.

Fig. 12

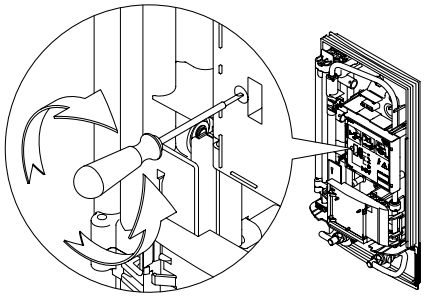

Model DEX / DEX12

Selection of power rating

Only undertaken by a competent person familiar with electric instantaneous water heaters.

- Upon first connection of the appliance to the supply voltage, select the maximum power rating.
- The maximum power rating of the appliance can be selected from 18, 21, 24 or 27kW (8.8 or 11.5 kW for DEX12) at the time of installation. The appliance will only commence normal operation after selection of the power rating. The maximum power rating should only be selected with reference to the technical data table, after ensuring that correct cable sizing and fuse protection is in place and with regard to local site conditions and IEE electrical

DEX Multiple Power System:

The rated capacity (max. power consumption) is 27 kW / 400 V and can be changed internally to 24 kW, 21 kW or 18 kW.

DEX12 Multiple Power System:

The rated capacity (max. power consumption) is 11.5 kW / 230 V and can be changed internally to 8.8 kW

regulations.

- Switch on the power supply to the appliance. The digital display on the appliance must light up.
- When switching on the power supply for the first time, the value “21“ (“12” for DEX12) flashes in the display. If not, please carefully read the Re installation section of these instructions.
- Select the maximum allowable power rating depending on the local situation via the up ⌃ and down ⌄ arrow keys.

Note: DEX set at 27 kW for connection only to 3/PE 400V AC supply.

- Press key ① to confirm the setting. The appliance starts operating.
- Mark the set power rating on the rating plate.
- Open the hot water tap. Check the function of the appliance.
- After having set the maximum allowable power rating, the heating element will be activated after approx. 10 - 30 seconds of water flow.
- Explain operation of the appliance to the end user and leave the operating instructions for their reference.
- Complete the product registration card and return it to Zip or register the product on line at www.zipwater.co.uk/product-registration.

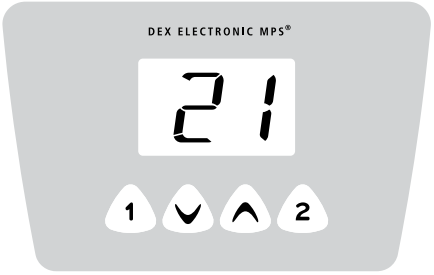

DEX

DEX 12

Shower application

The water heater’s temperature must be limited to 55 °C, if it is connected to a shower. The service menu parameter “Temperature Limit“ (“tL”) must be set to a value less or equal 55 °C (in consultation with the customer) and the lock level must be activated.

When the device is operated with preheated water, it must be ensured that this temperature is limited to 55 °C as well.

Reinstallation

- If the appliance is to be recommissioned under different installation conditions it may be necessary to alter the maximum power rating.
- This should only be done by a competent installer.
- To re-set the maximum power rating use a screwdriver (compliant to EN 60900, current issue) to short circuit the two pins as shown in Fig. 13.
- This will reset all heater parameters to factory settings.
- Value “21” (“12” for DEX12) will flash in the display panel until the maximum power rating has been selected.

Fig. 13

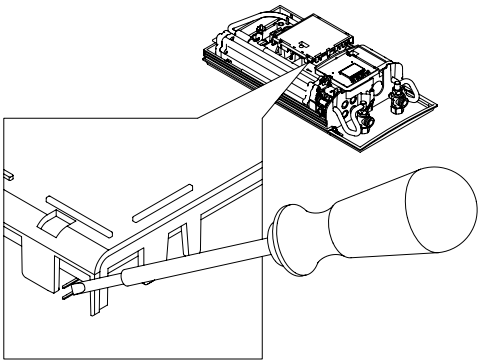

Lock level

The operating mode of the appliance can be restricted.

Activation of the Lock level

- Disconnect the appliance from the power supply.
- Insert the jumper on the power electronics (see Fig. 14).
- Reconnect the power supply to the appliance.

Deactivation of the Lock level

- Disconnect the appliance from the power supply.
- Remove jumper.
- Reconnect the power supply to the appliance.

Fig. 14

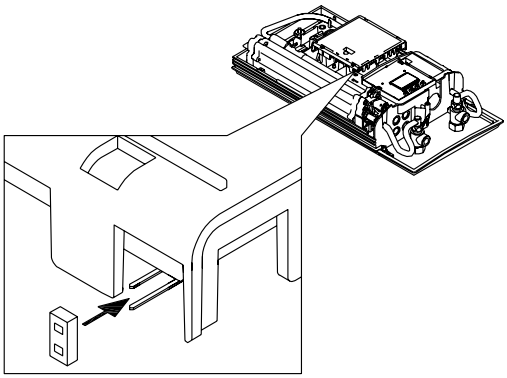

SERVICE MENU

The service menu offers an overview of system parameters and is used for diagnostics.

- Press key ① and key ② simultaneously for at least 2 seconds to call up the service menu, the display confirms by “FL” and by a flashing point. Use the arrow keys ⌃ and ⌄, to switch between the individual menu items.
- Press key ① to see the value of the currently selected menu. The value flashes in the display. (The values of some menus can be switched over by using the arrow keys ⌃ and ⌄.) Return to the drop-down-menu by pressing key ① again. With key ② return to the standard display (nominal value). After two minutes without any key stroke the system automatically switches back to the standard display.

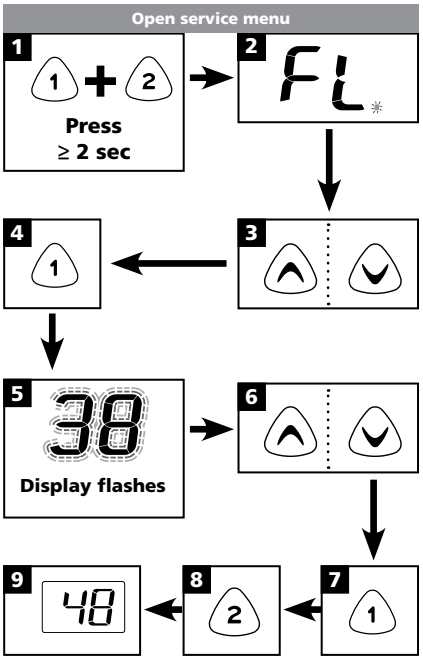

Menu item order of "Service menu":

FL	Flow:	Flow rate (l/min)
Po	Power:	Power consumption (kW)
t1	Temp in:	Inlet temperature (°C)
t2	Temp out:	Outlet temperature (°C)
CA	Control value:	Calibration value of the control system (40 - 60)
PL	Power limit:	Maximum power setting (kW)
Er	Diagnostics:	Last ten diagnostic messages (see below)
LL	Lock level:	Current lock level setting (see below)
nr	Software version:	Installed software version
Ch	Radio channel:	Radio channel of heater and remote control
rS	Received strength:	Signal quality of remote control (10% - 100%)
bL	Backlight:	Display illumination can be activated and deactivated
tL	Temperature Limit:	Set maximum temperature limitation (°C)
HC	Signal:	Quality of radio contact with diagnostic display

"Er": Diagnostics

Indication of the last ten diagnostic messages.

The error code is indicated by the first displayed value after pressing key ① (refer to "Trouble-Shooting & Diagnostics" in the front cover). By using the arrow keys ⌃ and ⌄ the last 10 error codes are displayed chronologically. The display indicates in turn the error numbers from "0" to "9" and the corresponding error. The last error will be recorded at position "0" and the former ones each shifted 1 position backwards.

"LL": Lock level

Setting Options:

- "0" no restriction (factory setting).
- "1" Disables "Reset to factory setting". Parameters can be seen, but not be modified in setup menu.
- "2" As "1", additionally service menu cannot be displayed.
- "3" As "2", additionally program 1 and 2 set temperature values cannot be changed.
- "4" As "3", additionally set temperature value on appliance cannot be changed.

Note: When lock level 1, 2, 3 or 4 is selected the system parameters cannot be modified in the service menu.

In order to modify system parameters it is necessary to remove the jumper from the main PCB as described under "Deactivation of the lock level".

"bL": Backlight (optional)

Setting options:

- "0" Backlight always on.
- "1" Backlight switches on automatically, if button is pressed, or water is heated (preset).
- "2" Backlight always off.

"tL": Temperature limit

- The maximum setable temperature can be reduced to any value within the temperature limit.
- The Lock Level must be activated by placing the jumper to enable the limitation.

Note: Maintenance work must only be carried out by a competent person familiar with instantaneous water heaters.

General cleaning

- Plastic surfaces and fittings should only be wiped with a damp cloth. Do not use abrasive or chlorine-based cleaning agents or solvents.
- For a good water supply, the outlet fittings (special tap aerators and shower heads) should be unscrewed and cleaned at regular intervals. Periodically, the electrical and plumbing components should be inspected by an authorised professional in order to ensure proper functioning and operational safety at all times.

Purging after maintenance work

This instantaneous water heater features an automatic air bubble protection system to prevent it from inadvertently running dry. Nevertheless, the appliance must be purged of air before using it for the first time. Each time the appliance is emptied (e.g. after work on the plumbing system, if there is a risk of frost or following repair work), the appliance must be re-purged before it is used again.

- Disconnect the instantaneous water heater from the mains power supply.
- Unscrew the jet regulator on the outlet fitting and open the cold water tap valve to flush out the water pipe and avoid contaminating the appliance or the jet regulator.
- Open and close the hot water tap until no more air emerges from the pipe and all air has been eliminated from the water heater.
- Only then should you re-connect the power supply again to the instantaneous water heater and screw the jet regulator back in.
- The appliance activates the heater after approx. 10 seconds of continuous water flow.

Cleaning and replacing the filter strainer

The cold water connection of this instantaneous water heater is equipped with an integrated shut-off valve and a strainer. Soiling of the strainer may reduce the warm water output. Clean or replace the strainer as follows:

- Disconnect the instantaneous water heater from the mains power supply and take steps to prevents its inadvertent re-connection.
- To open the cover, take off the small fascia plate, loosen the screw behind this fascia plate to remove the cover.
- Close the shut-off valve (a) in the cold water connection piece (position “closed“).
- Unscrew the screw plug (b) from the cold water connection piece and take out the strainer (c).
- The strainer can now be cleaned or replaced.
- After fitting of the clean strainer tighten the screw plug.
- Slowly reopen the shut-off valve in the cold water connection piece (position “open“).
- Vent the appliance by carefully opening and closing the warm water tap several times until air no longer emerges from the pipe.
- Re-fit the front cover. Then switch on the power supply.

Fig. 15

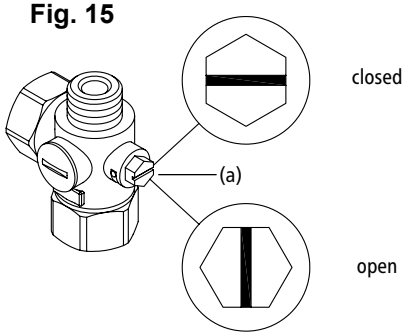

Fig. 16

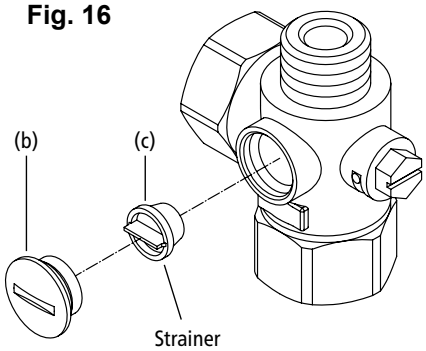

Cleaning and replacing the filter strainer if direct connected

The cold water connection of this instantaneous water heater is equipped with a strainer. Soiling of the strainer may reduce the warm water output. Clean or replace the strainer as follows:

- Disconnect the instantaneous water heater from the mains power supply and take steps to prevents its inadvertent re-connection.
- Close the shut-off valve in the mains water supply of the instantaneous water heater.
- To open the cover, take off the small fascia plate, loosen the screw behind this fascia plate to remove the cover.
- Unscrew mains water inlet from connection piece and take out the strainer.
- The strainer can now be cleaned or replaced.
- After refitting the clean strainer reconnect the mains water inlet to the connection piece.
- Slowly reopen the shut-off valve in the mains water supply.
- Vent the appliance by carefully opening and closing the warm water tap several times until air no longer emerges from the pipe.
- Re-fit the front cover. Then switch on the power supply.

Fig. 17

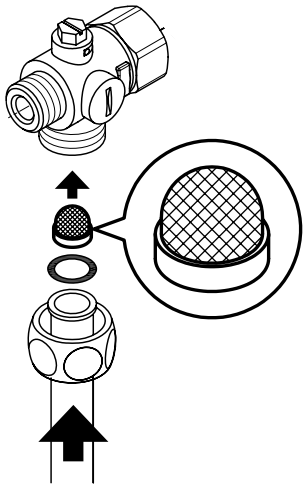

Model DEX / DEX12 only

Temperature setting

- Set the required temperature gradually to a lower or higher value with the arrow keys ⌄ and ⌃. The temperature changes by 1 °C if key is pressed shortly one time. Pressing a key for a longer time changes the temperature continuously. You can select the outlet temperature in a range from 20 °C to 60 °C.

Note: If temperature is set below 20 °C with arrow key ⌄ the display shows "- -" and the appliance switches off the heating function.

Note: If the water heater supplies a shower, the maximum temperature was reduced during initial operation. This limitation cannot be exceeded.

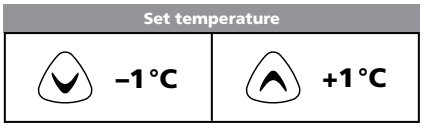

Programme buttons

The two programme buttons ① and ② allow to quickly select the preset temperature. When pressing a programme key, the preset temperature is selected and displayed.
The factory setting for programme ① is 35 °C and for programme ② it is 48 °C. To assign settings for the programme keys:

- Prolonged pressing of the programme key stores the previously selected temperature. The display changes from "P 1" or "P2" to the newly stored temperature value. This newly set temperature is now available to you each time you press the corresponding program key.

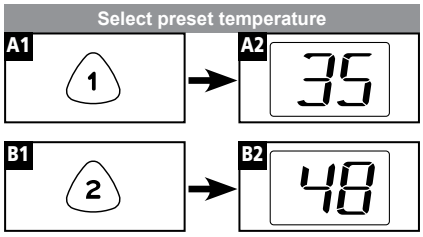

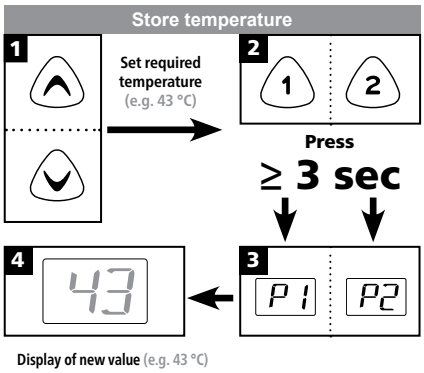

Temperature limitation

The DEX instantaneous water heater is equipped with an optional temperature limiting function. This scalding protection is deactivated in the factory setting.

- Switch on: Select the limit temperature, then press ① and ⌃ simultaneously for at least 3 sec. The display briefly confirms the activation by "H 1".
- Switch off: press program key ① and ⌄ simultaneously for at least 3 sec. The display briefly confirms the deactivation by "- -".

Note: By activation of the temperature limit also the programme keys are limited. Therefore, the fixed values of the programme keys may be set again after deactivation of the temperature limitation.

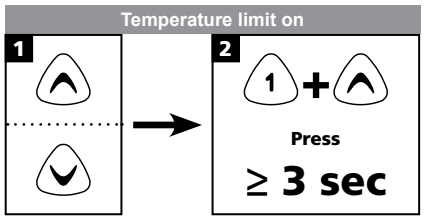

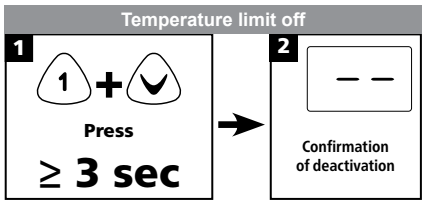

Reset to factory setting

All factory settings can be recalled:

- Press ⌃ and ⌄ simultaneously. The display now counts backwards from " 10" to "00" in second intervals. The appliance is reset at value "00"
- Stop pressing the keys prior to this to cancel the process.

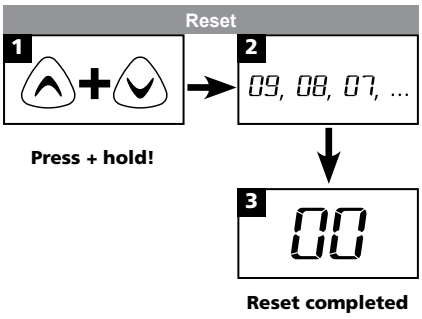

How to save energy

Set the exact temperature on the appliance and open the hot water tap. If the water feels too hot, do not add any cold water, instead, enter a lower temperature on the appliance. If you were to add cold water, the water already heated would cool down again and valuable energy would be wasted. Moreover, the cold water added in the tap is not covered by the control range of the electronic circuitry, with the result that a constant temperature is no longer guaranteed.

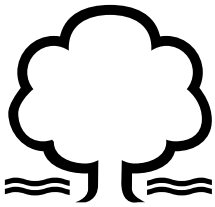

Power limit

If the full output of the DEX instantaneous water heater is not sufficient to heat the quantity of water drawn off water, this will be indicated by the LCD decimal point (e.g. in winter time, when opening several taps at once). Upon reducing the hot water flow rate, the decimal point disappears because the output of the appliance is again sufficient to reach the set temperature.

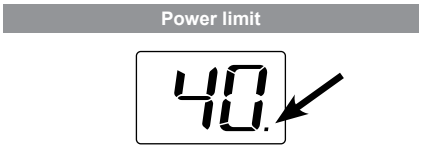

Top-up heating

When operating with preheated water (e.g. with solar systems), you must ensure that the inlet temperature does not exceed 70 °C.

If the inlet temperature exceeds the setpoint, the appliance is not providing any output, the flashing decimal point of the digital display indicates that the heating power is switched off.

FAULT FINDING

This instantaneous water heater was manufactured, thoroughly inspected & tested before delivery. Use the following fault finding information to diagnose the fault or seek remedial action.

- Repairs should only be carried out by competent persons familiar with electric instantaneous water heaters.
- All service work should be performed by an authorized Zip service engineer – for details of the full range of services available call Zip on **0345 6 005 005**.
- When calling for service, please always specify the appliance model and serial number.

Problem	Cause	Solution
Water stays cold (DBX/DEX) Digital display does not light up (DEX)	Circuit breaker tripped	Reset circuit breaker
	Safety pressure cut-out tripped	Contact Zip Service to reset SDB
	Safety thermal cut-out tripped (DBX)	Contact Zip Service to reset STB
Water stays cold, digital display does light up (DEX)	Safety thermal cut-out tripped	Contact Zip Service to reset STB
Display flashes error message “Er“ (DEX)	Control system has switched off	Switch power supply off and on. If “Er” still flashes contact Zip Service
Poor hot water flow rate (DBX/DEX)	Outlet fitting dirty or calcified	Clean shower head, jet regulator or sieves
	Fine filter dirty or calcified	Contact Zip Service to clean fine filter
Selected temperature not achieved, (DBX/DEX) Decimal point lights up (DEX)	Water flow rate too high	Reduce water flow rate at the tap
Selected temp. not achieved, decimal point does not light (DEX)	Cold water has been added via the tap	Tap hot water only; set temperature for use
Decimal point flashes (DEX)	Inlet temperature exceeding set point	Reduce inlet temperature
Selected temperature is perceived to be too cold (DBX)	Set temperature too low	Contact Zip Service to increase set temperature
Selected temperature is perceived to be too hot (DBX)	Set temperature too high	Contact Zip Service to reduce set temperature
No response upon keypress (DEX)	Hood is not fitted properly	Re-fit appliance cover correctly

END OF LIFE DISPOSAL

The use of this crossed out wheeled bin logo indicates that this product needs to be disposed of separately to any other household waste.

Within each of the European Union member countries, provisions have been made for the collection and recycling of unwanted electrical and electronic equipment.

In order to preserve our environment we ask that you dispose of this product correctly. Please contact Zip Customer Service for advice on 0345 6 005 005.

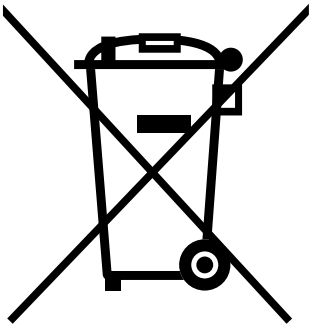

WARRANTY

The Zip appliance you have chosen is precision-built from the finest materials available and should give many years of trouble free service.

Certain warranties may be implied by law into your contract with Zip. The warranty provided below is additional to these implied warranties and nothing set out below shall limit your statutory rights or rights at law.

Zip Water UK warrants that, should any part fail within 12 calendar months of installation, that part will be repaired or replaced free of charge by Zip or its Distributor or Service Provider, except as set out below, provided the appliance is installed and used strictly in accordance with the instructions supplied, and that failure is not due to accident, misuse, abuse, unsuitable water conditions, or to any alteration, modification or repair by any party not expressly nominated by Zip.

No costs are payable by the customer other than any mileage or travelling-time charges incurred by a Zip Service Provider or the cost of removal, cartage and re-installation of any component of the appliance if it needs to be returned for repair to Zip or its Distributor.

This warranty does not cover damage resulting from non-operation of the appliance or consequential damage to any other goods, furnishings or property.

Zip does not exclude, restrict or modify any liability that cannot be excluded, restricted or modified or which cannot, except to a limited extent, be excluded, restricted or modified as between the owner or user and Zip under the laws applicable.

Furthermore, this warranty does not displace any statutory warranty, but, to the extent to which Zip is entitled to do so, the liability of Zip under any statutory warranty will be limited at Zip's option to the replacement of the appliance or supply of equivalent appliance, the payment of the cost of replacing the appliance or acquiring an equivalent appliance, or the payment of the cost of having the appliance repaired or the repair of the appliance.

Note It is our policy to continually improve products and as such we reserve the right to alter data, specifications and component parts without prior notice.

To ensure you have the latest revision of this instruction manual, please visit www.zipwater.co.uk to download the latest copy.

IMPORTANT

No liability is accepted for incorrect use of this product.

Zip Water UK

14 Bertie Ward Way, Dereham, Norfolk NR19 1TE

0345 6 005 005 sales@zipindustries.co.uk

www.zipwater.co.uk