ZIP HYDROTAP CELSIUS ALL-IN-ONE ARC BCSHA

Order Code MT2790Z8

Zip HydroTap Design Range CELSIUS All-In-One Boiling, Chilled & Sparkling Filtered water, plus Hot and Cold washing up water from a single tap. The appliance features a single under bench command centre including full colour interactive touch screen display with pin code protection, boiling water safety mode, 3 energy saving modes including sensor activated "sleep when its dark" and 0.2 micron water filtration.

Manufacturing Code	1256AU0D4ZN1R
Capacity	Residential
Disability Options	Unavailable

Tap	Zip HydroTap Design Range CELSIUS ARC Tap (Platinum)
Water Pressure	Min 172kPa - Max 700kPa
Water Connection	12.7mm BSP
Water Supply Requirements	Cold and Hot
Water Valves	Integrated 500kPa Pressure limiting valve and Dual Check Valve
Power Rating	1.9kW 220-240V 50/ 60Hz
Booster Power Rating	n/a
Power Supply	1 x 10Amp GPO
Dimensions	H333mm x W338mm x D461mm
Product Approvals	WaterMark, CE, RCM
Wels Rating	5 Star, 5.5 litres
Warranty	5 years (appliance warranty 36 months plus additional 24 months tank warranty)

Installation Requirements

"1. Installation and connection of your Zip HydroTap must be carried out by a qualified person, observing national and local regulations.
2. You will require suitable mains electrical and drinking water connections, plus waste water drainage all within 1.5 metres of the product.
3. HydroTap is air-cooled so discrete cabinetry cut-outs are required for ventilation.
4. Installation on most bench tops is straightforward however some stone bench tops may require a specialised cutting service.
5. If you live in a hard water area, we recommend installation of a Zip scale filtration kit.
6. Installation by Zip Professional Service can be arranged with a phone call or through www.zipwater.com"

Installation Detail

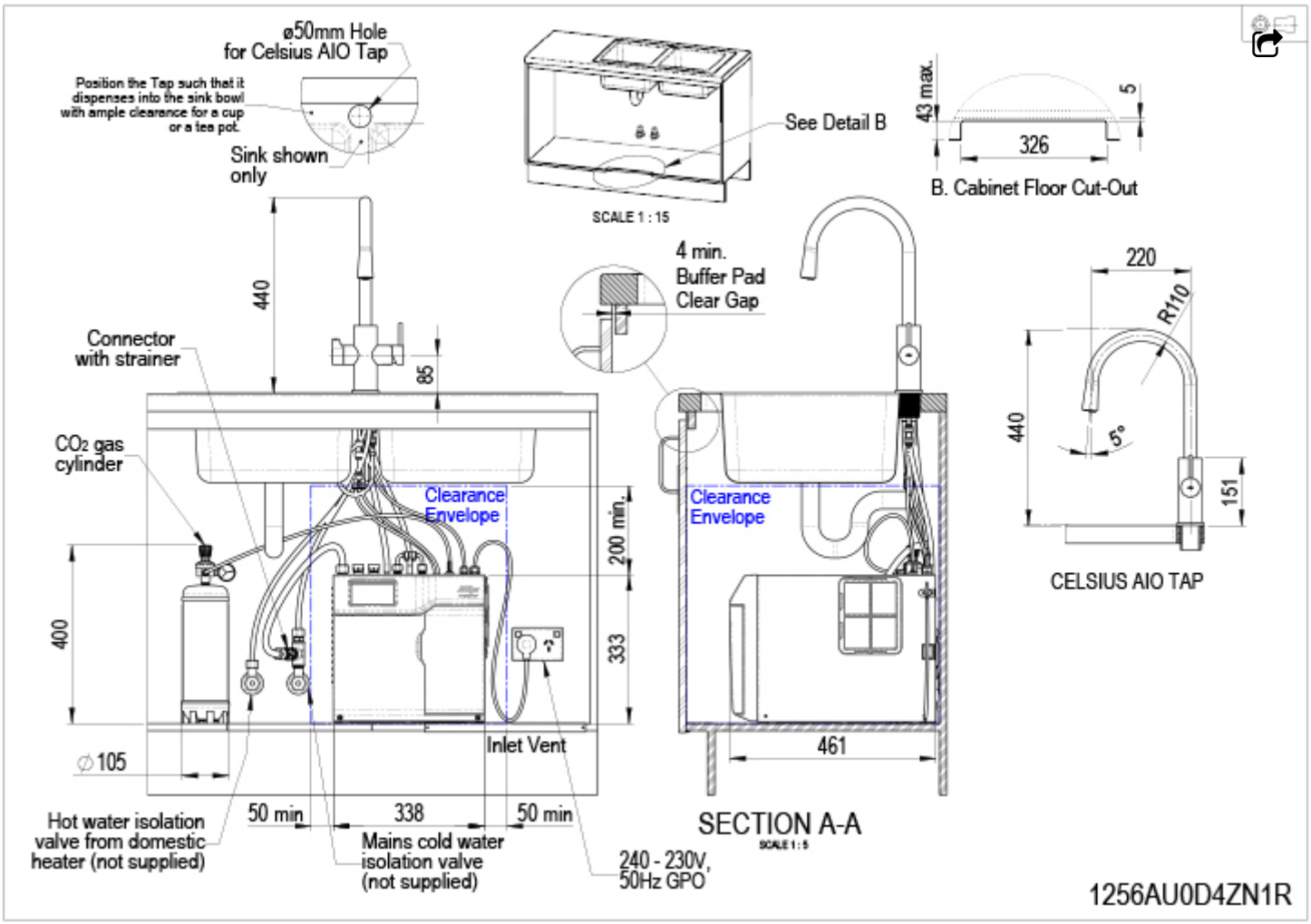

Tap Detail

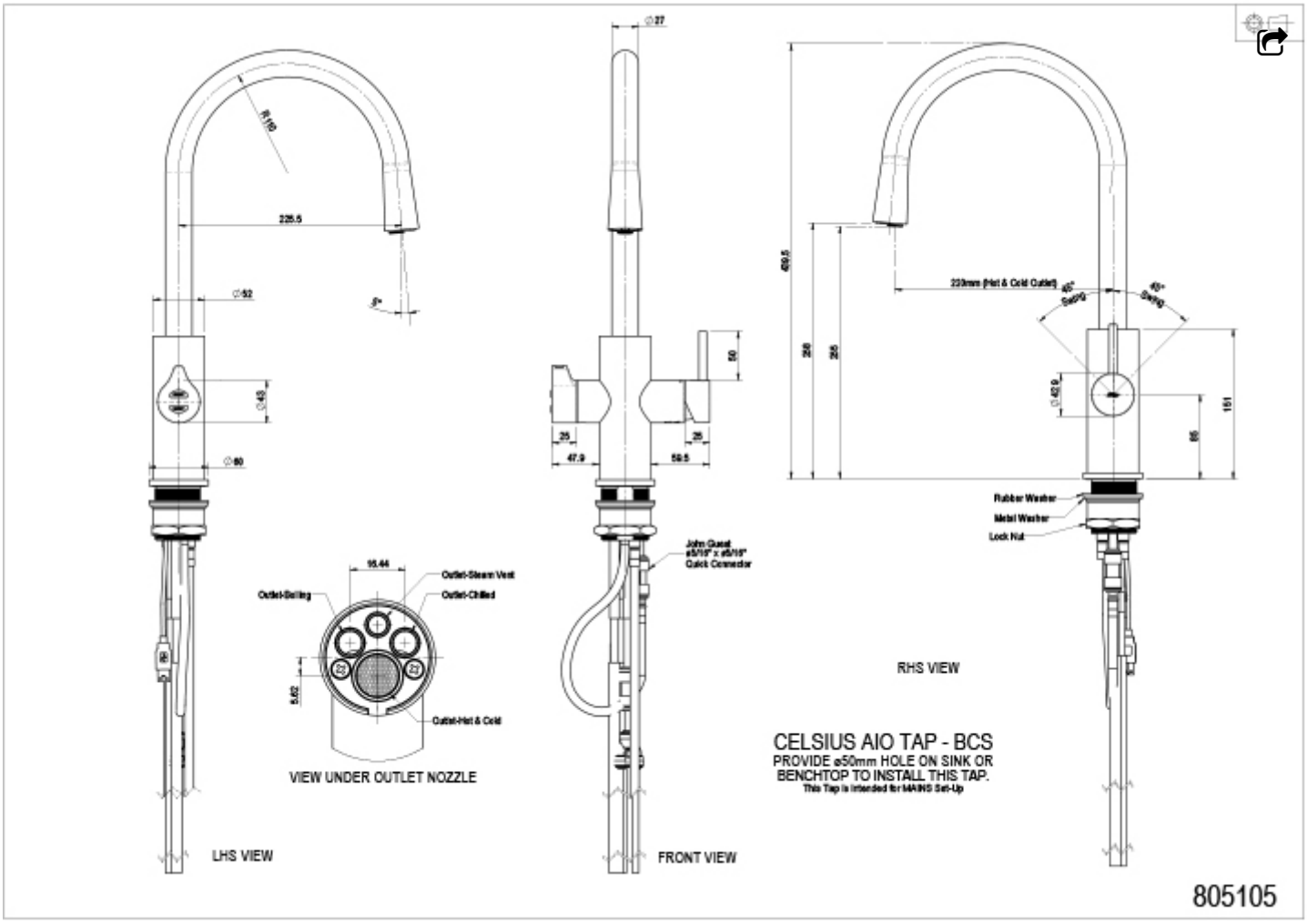

LHS VIEW
FRONT VIEW
RHS VIEW
VIEW UNDER OUTLET NOZZLE
Outlet-Steam Vent
Outlet-Chilled
Outlet-Boiling
Outlet-Hot & Cold
John Guest
Quick Connector
Rubber Washer
Metal Washer
Lock Nut
CELSIUS AIO TAP - BCS
PROVIDE ø50mm HOLE ON SINK OR
BENCHTOP TO INSTALL THIS TAP.
This Tap is intended for MAINS Set-Up
805105