# ZIP HYDROTAP CUBE 5IN1 BCSHA 240/175 CUBE MIXER

## Order Code HT3776Z1

Zip HydroTap Design Range 5 in 1 Boiling, Chilled, Sparkling, Filtered water plus Hot and Cold washing up water from two seperate taps. The appliance features a single under bench command centre including full colour interactive touch screen display with pin code protection, boiling water safety mode, 3 energy saving modes including sensor activated "sleep when its dark", 0.2 micron water filtration and a refillable CO2 cylinder.

| | |
|---|---|
| Manufacturing Code | 5353AU0U0UN1C |
| Capacity | Commercial |
| Disability Options | Unavailable |
| Boiling Cups per hour | 240 |
| Combined Chilled and Sparkling Cups per hour | 175 |

| | |
|---|---|
| **Tap** | Zip HydroTap Design Range CUBE Tap (Brushed Chrome) |
| **Water Pressure** | Min 250kPa - Max 700kPa |
| **Water Connection** | 12.7mm BSP |
| **Water Supply Requirements** | Cold |
| **Water Valves** | Integrated 500kPa Pressure limiting valve and Dual Check Valve |
| **Power Rating** | 2.3kW 220-240V 50/ 60Hz |
| **Booster Power Rating** | Zip HydroTap Booster 2.2kW 220-240V 50/ 60Hz |
| **Power Supply** | 2 x 10Amp GPO's (or 1 x 10Amp Double GPO) |
| **Dimensions** | H333mm x W394mm x D464mm |
| **Product Approvals** | WaterMark, CE, RCM, ARC |
| **Wels Rating** | 5 Star, 5.5 litres |
| **Warranty** | 5 years (appliance warranty 36 months plus additional 24 months tank warranty) |

## Installation Requirements

"1. Installation and connection of your Zip HydroTap must be carried out by a qualified person, observing national and local regulations.
2. You will require suitable mains electrical and drinking water connections, plus waste water drainage all within 1.5 metres of the product.
3. HydroTap is air-cooled so discrete cabinetry cut-outs are required for ventilation.
4. Installation on most bench tops is straightforward however some stone bench tops may require a specialised cutting service.
5. If you live in a hard water area, we recommend installation of a Zip scale filtration kit.
6. Installation by Zip Professional Service can be arranged with a phone call or through www.zipwater.com"
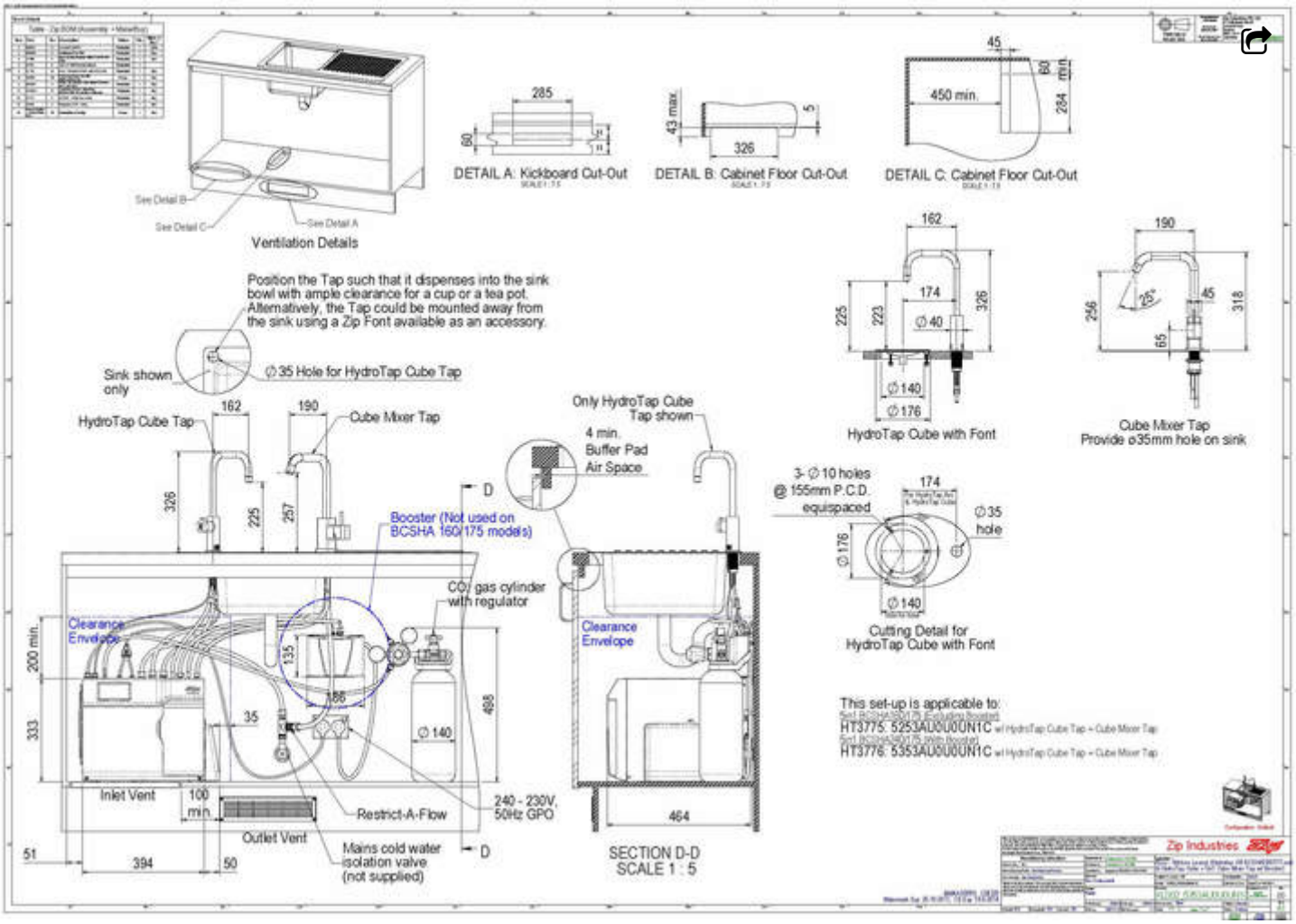
**Installation Detail**