ZIP HYDROTAP CUBE G4 BCS 240/175

Order Code HT3763Z3

Zip HydroTap Design Range Boiling, Chilled, Sparkling, Filtered water appliance featuring a single under bench command centre including full colour interactive touch screen display with pin code protection, boiling water safety mode, 3 energy saving modes including sensor activated "sleep when its dark", 0.2 micron water filtration and a refillable CO2 cylinder.

Manufacturing Code	5153AU0U0ZN1C
Capacity	Commercial
Disability Options	Unavailable
Boiling Cups per hour	240
Combined Chilled and Sparkling Cups per hour	175

Tap	Zip HydroTap Design Range CUBE Tap (Matte Black)
Water Pressure	Min 250kPa - Max 700kPa
Water Connection	12.7mm BSP
Water Supply Requirements	Cold
Water Valves	Integrated 500kPa Pressure limiting valve and Dual Check Valve
Power Rating	2.3kW 220-240V 50/ 60Hz
Booster Power Rating	Zip HydroTap Booster 2.2kW 220-240V 50/ 60Hz
Power Supply	2 x 10Amp GPO's (or 1 x 10Amp Double GPO)
Dimensions	H333mm x W394mm x D464mm
Product Approvals	WaterMark, CE, RCM, ARC
Warranty	5 years (appliance warranty 36 months plus additional 24 months tank warranty)

Installation Requirements

"1. Installation and connection of your Zip HydroTap must be carried out by a qualified person, observing national and local regulations.
2. You will require suitable mains electrical and drinking water connections, plus waste water drainage all within 1.5 metres of the product.
3. HydroTap is air-cooled so discrete cabinetry cut-outs are required for ventilation.
4. Installation on most bench tops is straightforward however some stone bench tops may require a specialised cutting service.
5. If you live in a hard water area, we recommend installation of a Zip scale filtration kit.
6. Installation by Zip Professional Service can be arranged with a phone call or through www.zipwater.com"
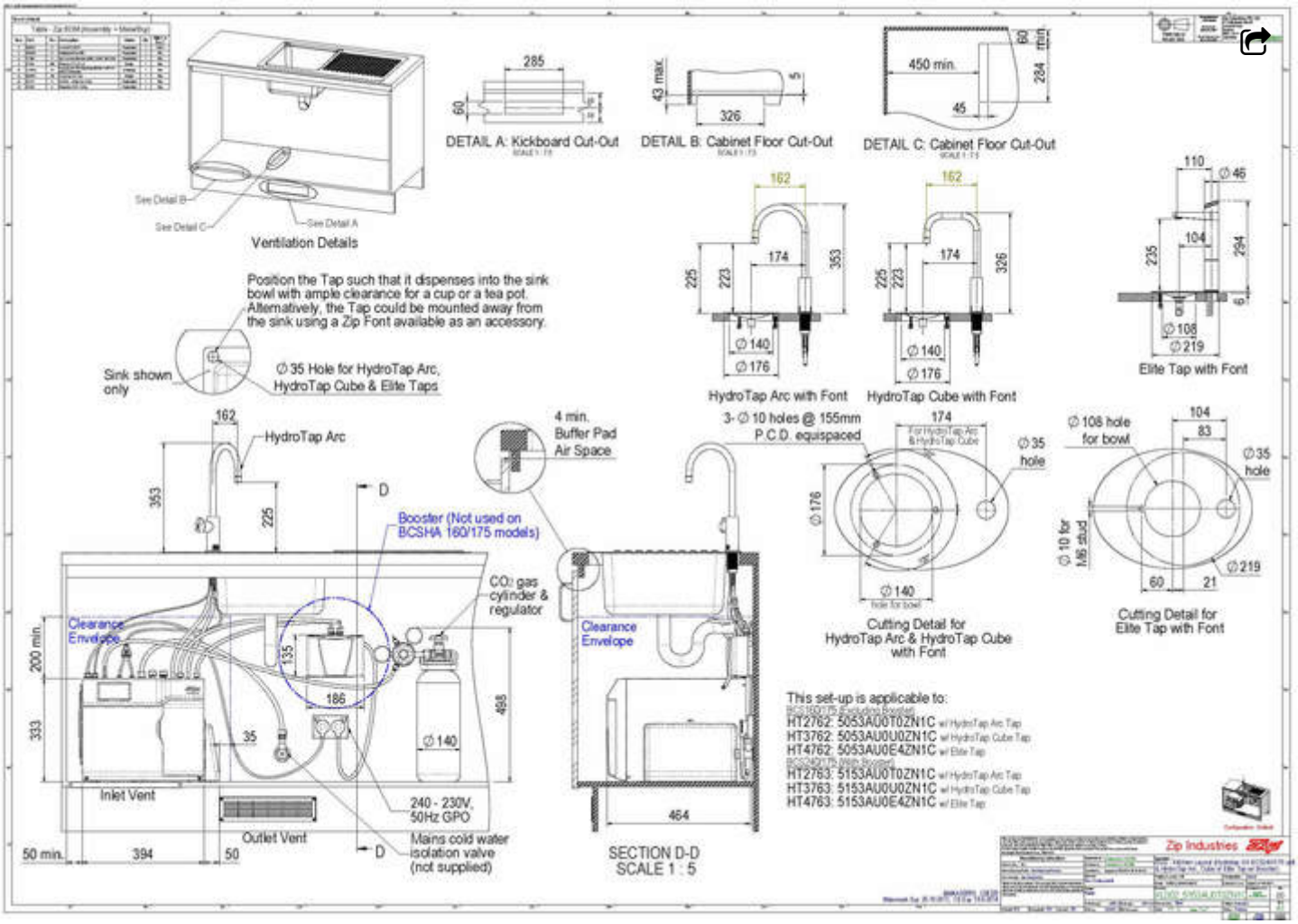
Installation Detail